Data sheet

Commercial Art.No.: 72.213.1253.0

male insert POW STS 3/3/6 HEA CA AG

revos POWER 3-/3-/6 pole + ground, male insert 690V/400V/3x100A + 690V/400V/3x40A + 400V/230V/6x16A, screw connection

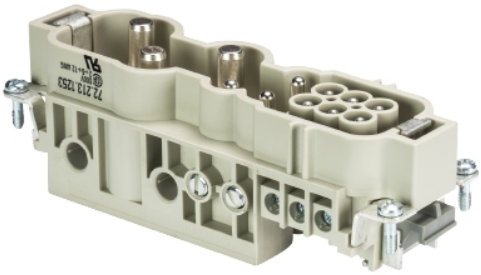

Commercial Art.No.	72.213.1253.0
EAN	4015573226791
Order Unit	10

certificates / approvals

Technical data

general

model	pin insert
inflammability class of insulation material acc. with UL94	HB
color	grey
mating cycles	200
pollution degree	3
suitable for modular version	no
alternative size	24
operating temperature range min.	-40 °C
operating temperature range max.	120 °C

connection data

connection type	screw connection
number of poles	3
plus switching contacts	0
number of pole for rated current 2	3
number of pole for rated current 3	6
total number of poles (without ground contact)	12
with wire protection	yes
min. conductor diameter rigid (solid/stranded)	1 mm²
max. conductor diameter rigid (solid/stranded)	25 mm²
protective contact	yes

technical data UL/CSA

nominal voltage according to UL/CSA	600 V
nominal current according UL	100 A
nominal current according CSA	100 A
min. conductor cross section flexible wire	1 mm²
max. conductor cross section flexible wire	25 mm²

conductor cross section flexible AWG wire	18-2 AWG

model

with housing	no

contacts

contact material	copper alloy
surface	silver-plated
contact resistance	≤ 1.5 mOhm
wire strip length	14 mm

screws head design/recomm. Torque

mounting screws	H1/0.5-0.7 Nm
clamping screws	H1/0.5-0.7 Nm
ground conductor screws	M5/2.0-2.5 Nm slot

technical data DIN EN 61984

nominal voltage	690 V
nominal voltage 2	400 V
nominal voltage face/ground	400 V
nominal current	100 A
nominal current 2	40 A
nominal current 3	16 A
rated impulse voltage	4 kV

classification

ECLASS 11	
ECLASS 8.1	27440205
ETIM 9.0	EC000438
ETIM 8.0	EC000438
ETIM 7.0	EC000438
ETIM 6.0	EC000438
ETIM 5.0	EC000438
ETIM 4.0	EC000438
ETIM 3.0	EC000438

product compliance

ROHS conformity status	compliant/exempted
ROHS exceptions	III-6(c)
REACH-SVHC conformity status	Duty-To-Declare
REACH-SVHC substances	Lead
REACH-SVHC CAS numbers	7439-92-1

Accessories

Commercial Art.No.:	Article-type description:	Description:

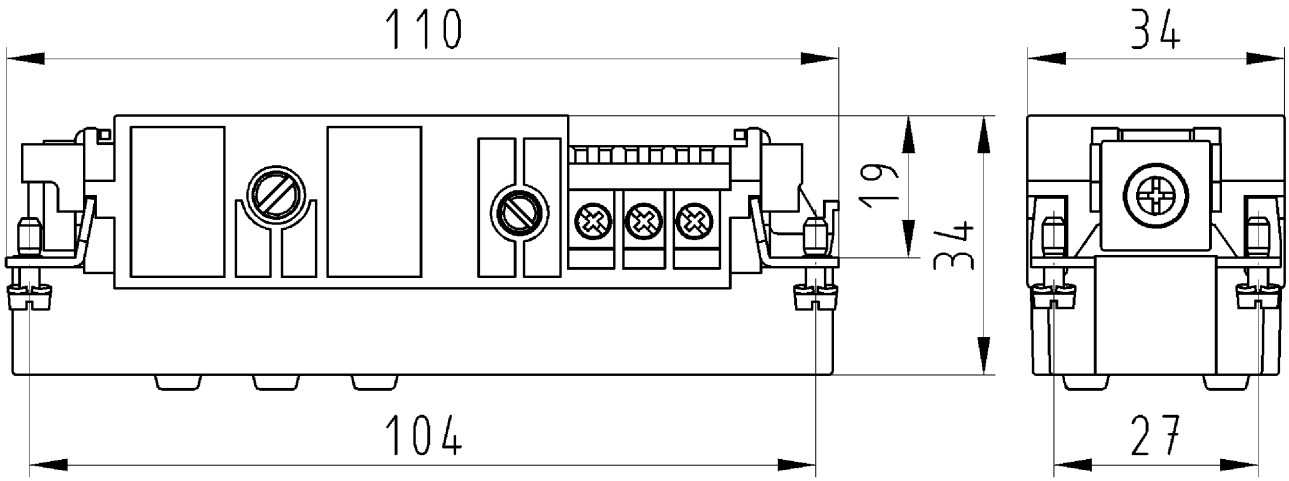

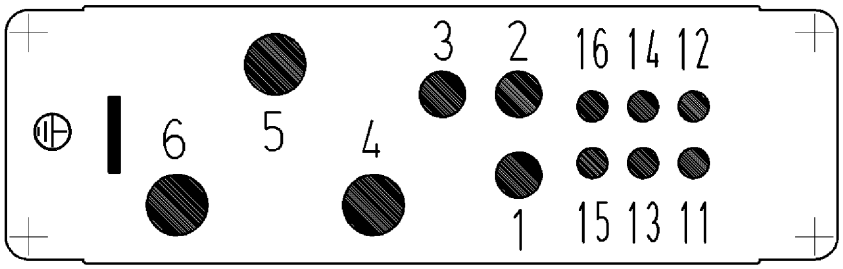

Weitergabe sowie Vervielfältigung dieses Dokuments, Verwertung und Mitteilung seines Inhalts sind verboten, soweit nicht ausdrücklich gestattet.
The reproduction, distribution and utilization of this document as well as the communication of its conents to others without express autorization is prohibited.

Steckereinsatz
72.213.1253.0

Zeichnungsnummer
72.213.1253.010W
Steckereinsatz

14.11.2007
Schreiber Patrick
M 1:1

72213125301OW_4 CADW2032 minwold 2009-06-24T14:02:24 1.000